TR Comfortline II / TR Spaceline / TR Ecoline II

Instructions for use - English

Always study this manual carefully before you attempt to operate your bathing system. The operator/user must always have access to the operating manual.

This bathing system is intended for professional use only where the patient will be under supervision of trained personnel.

Operating instructions and recommended maintenance procedures are explained in the following pages.

If you have any questions regarding the operation or maintenance of your bathing system and cannot find the answer in this manual, please contact us.

The system is designed for years of trouble-free operation, with proper use and maintenance.

Bathtub and shower water must be run at least every three days.

FOR COMFORTLINE AND ECOLINE:
Max patient Weight: 150KG /330 lbs

FOR SPACELINE:
Max patient Weight: 250 KG / 550 lbs

Always read the user manual

Always make sure that you have the correct version of the manual and it is mandatory to read the Instructions before the first time of using the equipment.

Registered at Medical Products Agency, Sweden as a MDR Class 1 product according to MDR 2017/745. TR reserves the right to make design changes and/or improvements without notice.

IFU Rev 2026-10

Table of Contents

Manufacturer	Page 3
Introduction	Page 4
Intended Use	Page 5
Unpacking	Page 6
Initialisition / Calibration	Page 7
Installation	Page 8
Safety Instructions	Page 9
Features and controls	Page 12
Product description	Page 13
Configurations	Page 14
Technical specification	Page 15
User instructions	Page 19
• How to fill the tub	Page 19
• How to enter and step out of the bath	Page 19
• Foot support	Page 20
• Showering	Page 20
• Option, Cleaning system	Page 20
• Option, Air Spa	Page 21
• Option, LED Light	Page 22
• Option, Music system	Page 23
• Option, Autofill	Page 24
System components	Page 25
• Lifting columns	Page 25
• Thermostatic mixer	Page 25
Product label	Page 26
Table of Symbols	Page 27
Routine maintenance	Page 28
Cleaning instructions	Page 31
Disposal / Recycling	Page 32
Maintenance record	Page 33
Training record	Page 34

Manufacturer

TR Equipment AB
Rundelgatan 2
SE-573 35 Tranås
Sweden

Phone: +46 (0)140 77 00 40
www.trequipment.com
info@trequipment.se

Group subsidiaries: USA TR Group Inc.	 Phone: +1 (800) 7526900 www.trequipment.com information@trequipment.com

Introduction

Dear Customer,

Thank you for choosing one of our quality products. We hope you enjoy the TR Comfortline II, Spaceline height adjustable bathtub, or TR Ecoline II fixed height bathtub.

This manual shall, in conjunction with staff training, ensure that the operator/user is always using and/or operating the Comfortline, Spaceline or Ecoline correctly.

New colleagues must be trained by qualified and experienced staff.

TR Equipment AB requires that each user has read and understands the entire operating manual and that they can apply the instructions as specified. This applies to anyone who was not present at the in-service.

This instruction manual should generally be kept easily accessible for every user. Copying the whole manual is encouraged since its sole purpose is to improve the standard of training and safety.

Please order another copy from us if the instruction manual is lost or unusable, or if it has become illegible over time.

If you need further information, do not hesitate to contact TR Equipment AB or one of our qualified partners.

Always read the user manual

Always make sure that you have the correct version of the manual and it is mandatory to read the Instructions before the first time of using the equipment.

Warning

- Mandatory to read the operating manual before using the equipment.
- Make sure you have read, understood and applied the information on the following pages before using the bathtubs.

Intended use:

- The TR Comfortline, TR Spaceline and TR Ecoline are intended for bathing and showering patients
- The TR Comfortline, TR Spaceline and TR Ecoline is only intended to be used for short term use <60min when in contact with breached or compromised skin.
- The TR Comfortline and TR Ecoline are NOT intended to be used with patients that exceed a weight of 150kg.
- The TR Spaceline is are NOT intended to be used with patients that exceed a weight of 250kg.
- The TR Comfortline, TR Spaceline and TR Ecoline is intended to be used indoors in a bathroom or a wet room.
- The patient is typically a person who is unable to take care of their own personal hygiene.
- The user is any adult person who is capable of reading and understands the operating manual and is qualified to care for dependent persons/patients.
- Before using the TR Comfortline / Spaceline / Ecoline, the user must read and understand the operating manual.

Warning

- Mandatory to read the operating manual before using the equipment.
- Make sure you have read, understood and applied the information on the following pages before using the bathtubs.

Unpacking

When you receive a bathtub from us it's placed on a pallet surrounded by a cardboard crate.
If the cardboard box is wrapped in plastic carefully cut and remove the plastic.

Start unpacking the bathtub by removing the lower carton staples with a pliers.
DO NOT use any sharp tools that may scratch the bathtub.

Carefully lift off the cardboard frame from the pallet. When lifted, do so briefly and use at least two people.
Carefully lift off the bathtub from the pallet. DO NOT push or pull the bathtub!

Warning

- Never push or pull the bathtub! Always lift the bathtub from the pallet and into position!
- If you push or pull the bathtub it will damage lifting columns / legs.
- The bathtub may only be used after it has been successfully and correctly installed

Calibration/Initialization

An initialization/Calibration should be carried out on the height adjustable TR Comfortline and TR Spaceline::

- The very first time the bath is started up
- After power failure
- If the power has been disconnected from the mains supply.

Reason:
The initialisation/calibration function (continuous movement monitoring) is designed with the safety and protection of the equipment in mind. The control switches OFF automatically if one of the lifting columns is working faster than the other one.

Following calibration instruction is for bathtub

- Press the UP and DOWN button simultaneously on the hand control to calibrate the lifting columns.
- After approximately 10-12 seconds you will hear a “click sound” from the control box and after approximately 5 seconds more, you will hear an audible tone from the control box.
- Keep pressing the UP and DOWN button and the lifting columns will start to move to the highest position. At the highest position you will hear an audible tone and the system is ready to be used.

Note:
If the tub is not at the lowest position when you start to calibrate, the lifting columns will move to the lowest position first and then move to the highest position. Keep both the UP and DOWN button pressed during the calibration.

Installation Instructions

The TR Comfortline II bathtub and TR Ecoline are delivered fully assembled, ready to be connected to water and power supply at the customer's premises and must be installed according to local guidelines and regulations.

The tub must be cleaned before the first use!

Assembly process:
Do not drag nor push the bathtub across the floor as this will damage the lifting columns or legs.
When lifted, do so briefly and use at least two people.

1. Once the bathtub is in its final position, once again lift the bathtub briefly at each end at the same time to release any tensions that might have been created between the lifting columns during installation
2. The adjustable feet are used to level and adjust the bathtub. Please note that the head end of the bathtub must be approximately 2cm (3/4" inch) higher than the foot end to allow the water to drain more easily.
3. Flush the pipes at the premises thoroughly before connecting the Comfortline bathtub to protect the tub and fittings from dirt.
4. A certified electrician shall connect the mains cord to a wall mounted mains connection (splash proof) and in accordance to local regulations.
5. Raise the tub to its highest position and use the flexible drain hose to establish connection between the floor gully and the drainage outlet underneath the tub.
6. Carry out a functional test (Height adjustable bathtub): Test the UP/DOWN function by pushing each button the hand control. An initialisation shall be performed before the first use. See table of contents for separate Initialisation/calibration instructions.
7. Carry out a functional test of the thermostatic mixer: The GROTHERM 800 thermostatic mixer is pre-set to a Maximum outlet temperature of 43° at ideal installation conditions at the factory. Make sure that maximum outlet temperature is 43°. If the maximum outlet temperature is higher an adjustment needs to be done according to the instructions from the manufacturer of the thermostatic mixer (separate manual supplied at delivery). ALWAYS physically check the water temperature by hand before and during bathing to ensure correct function of the thermostatic mixer.
8. Carry out a Scalding safety function test:
   Start filling the tub with water, shut OFF the cold-water supply to the thermostatic mixer. Within 2 seconds the thermostatic mixer shall be shut OFF. If the thermostatic mixer continues to supply only HOT water the thermostatic mixer needs to be replaced. DO NOT use the tub until the thermostatic mixer has been replaced.
9. Make sure the diverter mechanism allows you to switch between the tap and shower function.
10. Check that cold/hot water connections and make sure the drain hose is intact.
11. Make sure that the mains cord is free from damage and properly connected.

Installation Instructions

On-site preparations:

1. 1/2"Inch (hot and cold) water connections.
2. Check valves and shut off valves according to local regulations.
3. Incoming water pressure 1-5 bar.
4. Mains connection 230V/50Hz or 110V/60Hz depending on model.
5. Fuse 10A

The bathtub may only be connected to the power supply via a cord that is connected to a GFCI (Ground Fault Circuit Interrupter including an easily accessible switch near the bathtub.

Installation of the thermostatic mixer:

1. Flush the pipes at the premises according to DIN1988.
2. Attach connections (hot and cold) to the water supply.
3. The hot water supply needs to be on the left side and the cold-water supply must be on the right side.

Check the connections for any leaks and make sure the fittings are working properly.

Warning

- All electric conduit, fitting and wiring to bath supplied must be installed by a certified electrician in accordance with local regulations. Main switch, main fuse and GFCI, Ground Fault Circuit Breaker are NOT included at delivery and must be supplied by others.
- The bathtub may only be used after it has been successfully and correctly installed.

Installation Instructions

Assembly of the cleaning system

Valve:

- Assemble the valve stem (1) by screwing it into the left female threaded coupling No.1 on the bath tub.
- Screw on the protective sleeve (2) onto the valve stem (1).
- Push on the chromed ring (3) over the protective sleeve (2).
- Finally, screw on the key (4) onto the completed valve.

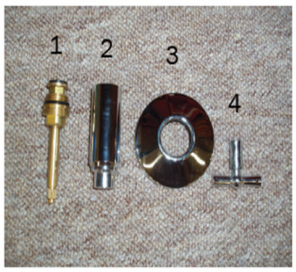

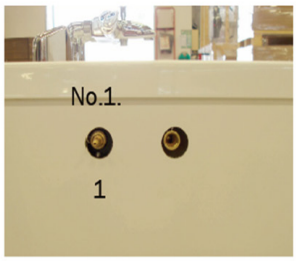

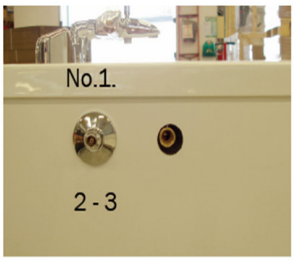

The cleaning hand shower holder:

- Assemble the 90° elbow (1) by screwing it into the right female threaded coupling No.2 on the bathtub. Seal with sealing tape.
- Mount the hand shower holder (2) over the 90° elbow (1) and fasten it with the supplied screw.
- Finally, screw the pipe interrupter (3) onto the 90° elbow (1).

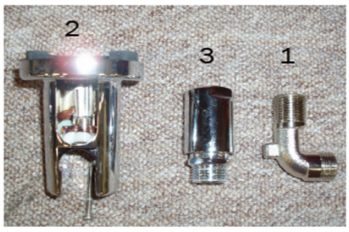

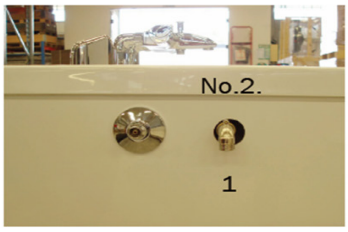

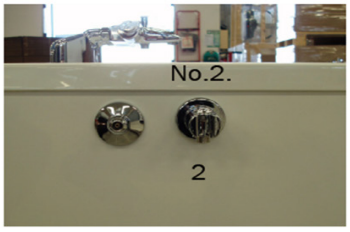

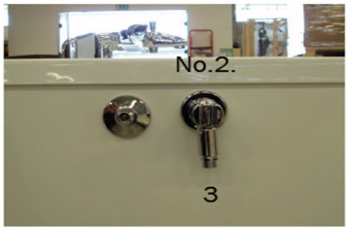

Safety Instructions

- The height adjustable TR Comfortline and TR Spaceline bathtubs may only be operated by qualified and trained staff.
- New colleagues must be trained by qualified and experienced staff.
- Never leave the patient unattended.
- All safety and operating instructions must be read, understood, adhered to and applied when using the bath.
- Only step into the height adjustable TR Comfortline and Spaceline bathtub when it is in its lowest position
- Only step out of the height adjustable TR Comfortline and Spaceline bathtub when it is in its lowest position
- The bathtub may only be installed and connected according to TR Equipment AB

Installation instructions.

- All electrical installations must be performed by a certified electrical installation company and according to local regulations.
- All plumbing installation must be performed by a certified plumbing installation company and according to local regulations.
- The bathtub may only be connected to the power supply via a cord that is connected to a **GFCI (Ground Fault Circuit Interrupter)** including an easily accessible switch near the bathtub.
- Even if you have chosen TR Equipment AB or a TR Equipment distributor to install the bathtub, the Cold and Hot water supply and Electrical wiring is the responsibility of the buyer. All electrical wiring and plumbing must be performed by a certified electrical- or plumbing installation company.

If you have questions regarding operation or maintenance of your TR Comfortline, TR Spaceline and TR Ecoline and cannot find the answer in this manual, please contact us!

In case of accident

Note: In case of a serious incident when using the TR Comfortline, TR Spaceline or TR Ecoline, this should be reported to the manufacturer and to the local authorities where you are established.

Warning

- The patient shall never be left unattended.
- Always check the water temperature by hand before using the shower on the patient to prevent patients from being scalded or shocked by cold/hot water.
- NEVER enter or step out of the height adjustable TR Comfortline or TR Spaceline bathtub when the bathtub is in a raised position.
- The equipment shall not be used in any way that varies from the safety precautions and operating procedures described in this manual. The equipment shall not be operated by anyone until the user has read and understands the Operating manual.

Features and Controls

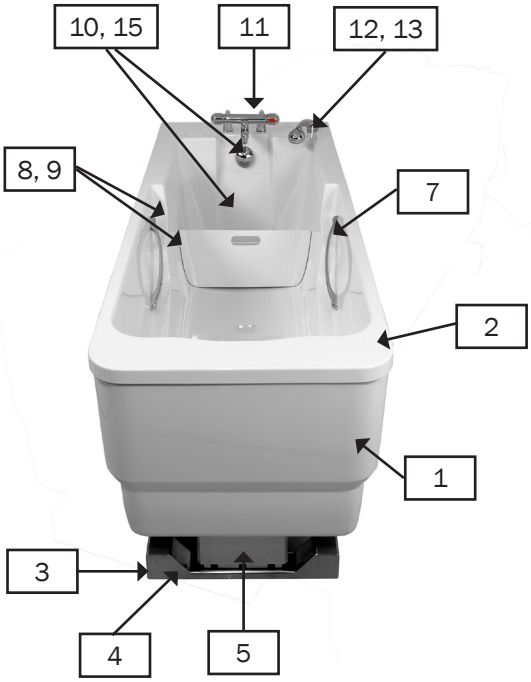

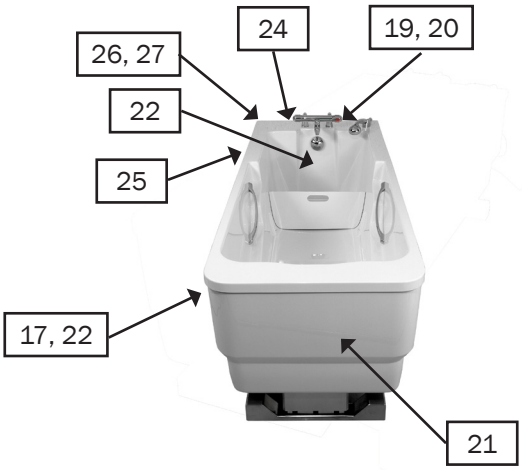

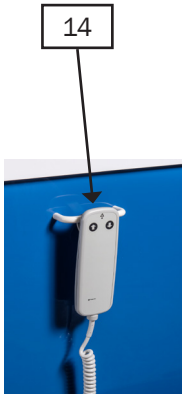

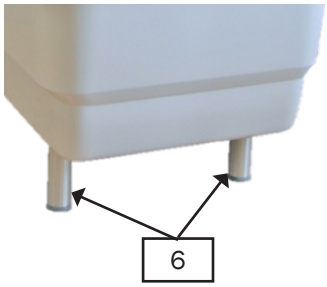

1	Tub side cover
2	Tub
3	Legs
4	Adjustable feet
5	Lifting actuators
6	Ecoline, fixed height legs
7	Handles
8	Foot support
9	Foot support slots
10	Drain plug
11	Thermostatic mixer
12	Shower handle
13	Shower hose
14	Hand control, TR Comfortline and TR Spaceline
15	Overflow drainage, control to open and close drain plug
16	Drainage hose

Standard position for Options	
17	Music system Control pad*
18	Music system AUX*
19	Autofill control pad**
20	Air spa control pad*
21	Air spa blower* (behind side cover)
22	Led light**
23	Led light control button*
24	Up/Down control pad *
25	Cleaning system
26	Yellow cleaning hose
27	Shower handle for cleaning hose

* Available for TR Comfortline and TR Spaceline only.
** Available for both height adjustable and fixed height bathtubs.

Product description

The TR Comfortline and TR Spaceline can be delivered as a height adjustable bathtub that can be raised and lowered to infinite positions within the height range, or as a fixed height bathtub with three optional fixed heights.

The TR Ecoline is a fixed height bathtub and can be delivered in three different heights.

The bathtub standard color is white.

The TR Comfortline, TR Spaceline and TR Ecoline are designed for bathrooms in residential facilities, clinics and hospitals and consists of::

- The tub, side cover and maintenance hatch are made of fiberglass reinforced polyester covering the whole supporting frame, lifting columns, legs, control box and internal sanitary installations.
- The 1/2 inch cold and hot water inlet hoses are located at the tap end. The maintenance hatch at the tap end can be removed for repair and maintenance work.
- The three-step adjustable foot support is pushed into the slots to accommodate the different lengths of patients and to avoid from sliding and provides secure support for their feet. The foot support can be removed, for example when using the TR9650 mobile stretcher lift.
- Two built in handles offer additional support when getting in and out of the tub.
- Overflow protection and pop-up drain which opens and closes the drainage system by rotating the overflow valve.
- The thermostatic mixer is designed to regulate the water temperature to the bathtub filling spout and to the handheld shower. See separate operating manual for the thermostatic mixer (supplied at delivery) for further information.
- The shower handle with shower hose is to be used to shower the patient and to rinse the equipment after cleaning.

TR Comfortline, height adjustable bathtub

- The height adjustable TR Comfortline can be adjusted between 650-100mm (26-40 inches).
- Two synchronized lifting columns with double controls for height adjustment.
- Adjustable feet if the floor should be uneven.
- The hand control with spiral cord is located on the hatch bracket and is used to raise and lower the tub.

TR Spaceline, height adjustable bathtub

- The height adjustable TR Spaceline can be adjusted between 650-100mm (26-40 inches).
- Two synchronized lifting columns with double controls for height adjustment.
- Adjustable feet if the floor should be uneven.
- The hand control with spiral cord is located on the hatch bracket and is used to raise and lower the tub.

TR Ecoline, fixed height bathtub

- The fixed height bathtub can be ordered in three different heights, 650mm (26 inches), 750mm (29 inches) and 850mm (33 inches).
- Adjustable legs if the floor should be uneven.

Configurations

Product description	Version
TR Comfortline II and TR Spaceline, height adjustable incl. drainage and thermostatic mixer.	230V/50Hz, 10A
TR Ecoline II, fixed height	230V/50Hz, 10A (Options only)

TR Comfortline II, possible configurations and options		
Ø40mm drainage	Ø50mm drainage	Customised drainages
Thermostatic mixer TMV2	Thermostatic mixer TMV3	Thermostatic mixer Antibactus
Without thermostatic mixer	110V/60Hz	Fixed height Ecoline
Air-Spa	Autofill	LED light
Music sound system	Cleaning	Customised color
Long hoses, power cord and drainage for reversed installation.	Optional thermostatic mixers: TMV2, TMV3, FMM Antibactus	Shepherds crook

TR Spaceline, possible configurations and options		
Ø40mm drainage	Ø50mm drainage	Customised drainages
Thermostatic mixer TMV2	Thermostatic mixer TMV3	Thermostatic mixer Antibactus
Without thermostatic mixer	110V/60Hz	Fixed height
Air-Spa	Autofill	LED light
Music sound system	Cleaning	Customised color
Long hoses, power cord and drainage for reversed installation.	Optional thermostatic mixers: TMV2, TMV3, FMM Antibactus	Shepherds crook

TR Ecoline II, possible configurations and options		
Ø40mm drainage	Ø50mm drainage	Customised drainages
Autofill	LED light	Customised color

Possible equipment combinations	
TR Comfortline II / TR Spaceline* / TR Ecoline I	TR9650 – Chair lift
TR Comfortline II / TR Spaceline* / TR Ecoline I	TR9650 - Stretcher lift
TR Comfortline II / TR Spaceline* / TR Ecoline I	TR9650 – Combi lift
* TR Spaceline can be combined with TR 9650 Chair / Strether / Combi lift if patient's weight doesn't exceed 150 kg.	

Technical specification

Comfortline II, height adjustable bathtub supplied with Grotherm 800 thermostatic mixer

Input Voltage	1-Phase 230VAC/50Hz or 110VAC/60Hz, 10A
Control voltage	24V DC
Service life Lifting columns	20.000 strokes / 10 years
Maximum load	Patient weight shall not exceed 150Kg
Water volume	180 l / 48 gallons excl. patient
Outside length	2080mm / 82″
Outside width	780mm / 31″
Inside width (head end)	690mm / 27″
Inside width (foot end)	600mm / 24″
Inside width (tub body)	440mm / 17″
Overall weight	100kg / 220lbs
Adjustable height	From 650mm – 1000mm/ 26″ – 40″
Access height	650mm / 26″
Clearance between floor and the bottom of the tub	150mm / 6″
Lift stroke	350mm / 14″
Lift speed	8mm/s / 0,5″/s
Lifting time (filled bathtub)	45 seconds (from lowest to highest position)
Lowering time (filled bathtub)	40 seconds (from highest to lowest position)
Lifting power per actuator	3000N / 300kg
Recommended water pressure	1-5 bar
Maximum static water pressure	5 bar
Flow at 3 bar, bath filling	20l/minute
Recommended hot water temperature supplied to mixer	60°C (Maximum 70°)
Maximum hot water temperature supplied from mixer	43°
Connection hoses hot and cold water	BSP ¾ female

Comfortline II, height adjustable bathtub supplied with Grotherm 800 thermostatic mixer

Filling time up to overflow drainage.	10 minutes (at 5 bar pressure)
Emptying time	4 ½ minutes
Filling time Autofill (option):	
To Autofill level 1 (at 5bar pressure)	4 min, 30 seconds
From Autofill level 1 up to Autofill level 2 (at 5 bar pressure)	5min, 30 seconds

Technical life span	10 years if the product is serviced and maintained according to instructions in this manual.

Transport and storage Ambient temperature	-20°C - +70°C	-4°F - +158°F

Technical specification

Spaceline, height adjustable bathtub supplied with Grotherm 800 thermostatic mixer

Input Voltage	1-Phase 230VAC/50Hz or 110VAC/60Hz, 10A
Control voltage	24V DC
Service life Lifting columns	20.000 strokes / 10 years
Maximum load	Patient weight shall not exceed 250Kg
Water volume	300 l / 48 gallons excl. patient
Outside length	2116mm / 83″
Outside width	936 mm / 31″
Inside width (head end)	842 mm / 33″
Inside width (foot end)	748mm / 29″
Inside width (tub body)	607 mm / 24″
Overall weight	100kg / 220lbs
Adjustable height	From 650mm - 1000mm/ 26″ - 40″
Access height	650mm / 26″
Clearance between floor and the bottom of the tub	150mm / 6″
Lift stroke	350mm / 14″
Lift speed	8mm/s / 0,5″/s
Lifting time (filled bathtub)	45 seconds (from lowest to highest position)
Lowering time (filled bathtub)	40 seconds (from highest to lowest position)
Lifting power per actuator	3000N / 300kg
Recommended water pressure	1-5 bar
Maximum static water pressure	5 bar
Flow at 3 bar, bath filling	20l/minute
Recommended hot water temperature supplied to mixer	60°C (Maximum 70°)
Maximum hot water temperature supplied from mixer	43°
Connection hoses hot and cold water	BSP ¾ female

TR Spaceline, height adjustable bathtub supplied with Grotherm 800 thermostatic mixer

Filling time up to overflow drainage.	14 minutes (at 5 bar pressure)
Emptying time	9 minutes
Filling time Autofill (option):	
To Autofill level 1 (at 5bar pressure)	7 min, 30 seconds
From Autofill level 1 up to Autofill level 2 (at 5 bar pressure)	12 min, 45 seconds

Technical life span	10 years if the product is serviced and maintained according to instructions in this manual.

Transport and storage Ambient temperature	-20°C - +70°C	-4°F - +158°F

Technical specification

TR Ecoline II, fixed height bathtub supplied with Grotherm 800 thermostatic mixer

Input Voltage, only if the tub is equipped with options	1-Phase 230VAC/50Hz or 110VAC/60Hz
Control voltage	24V DC
Maximum load	Patient weight shall not exceed 150Kg
Water volume	180 l / 48 gallons excl. patient
Outside length	2080mm / 82″
Outside width	780mm / 31″
Inside width (head end)	690mm / 27″
Inside width (foot end)	600mm / 24″
Inside width (tub body)	440mm / 17″
Overall weight	100kg / 220lbs
Optional heights, access heights	650mm / 26″, 750mm/29″ or 850mm/34″
Clearance between floor and the bottom of the tub	150mm / 6″
Recommended water pressure	1-5 bar
Maximum static water pressure	5 bar
Flow at 3 bar, bath filling	20l/minute
Recommended hot water temperature supplied to mixer	60°C (Maximum 70°)
Maximum hot water temperature supplied from mixer	43°
Connection hoses hot and cold water	BSP ¾ female
Filling time up to overflow drainage.	10 minutes (at 5 bar pressure)
Emptying time	4 ½ minutes

Technical life span	10 years if the product is serviced and maintained according to instructions in this manual.

Transport and storage Ambient temperature	-20°C - +70°C	-4°F - +158°F

Height adjustable bathtub,
TR Comfortline

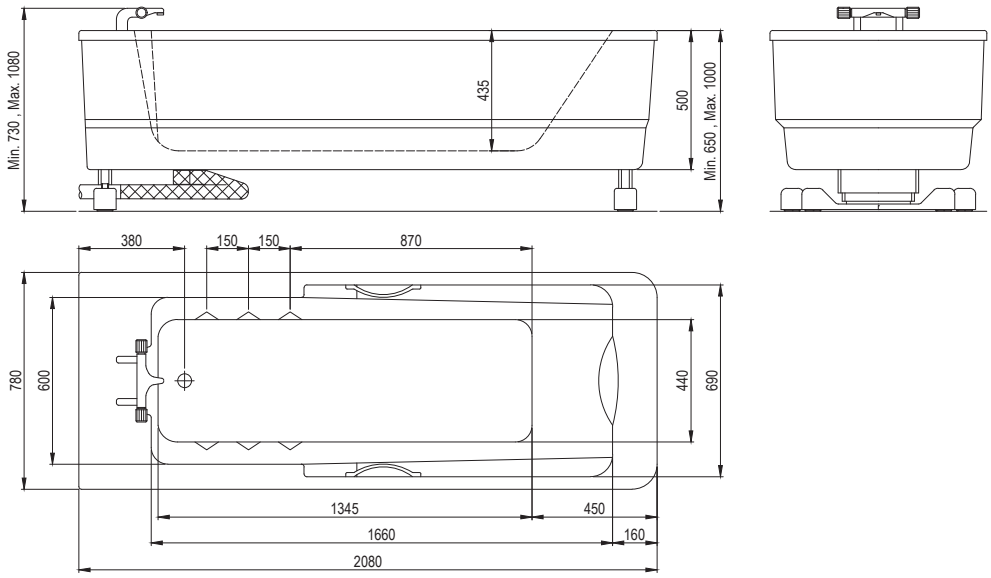

Height adjustable bathtub,
TR Spaceline

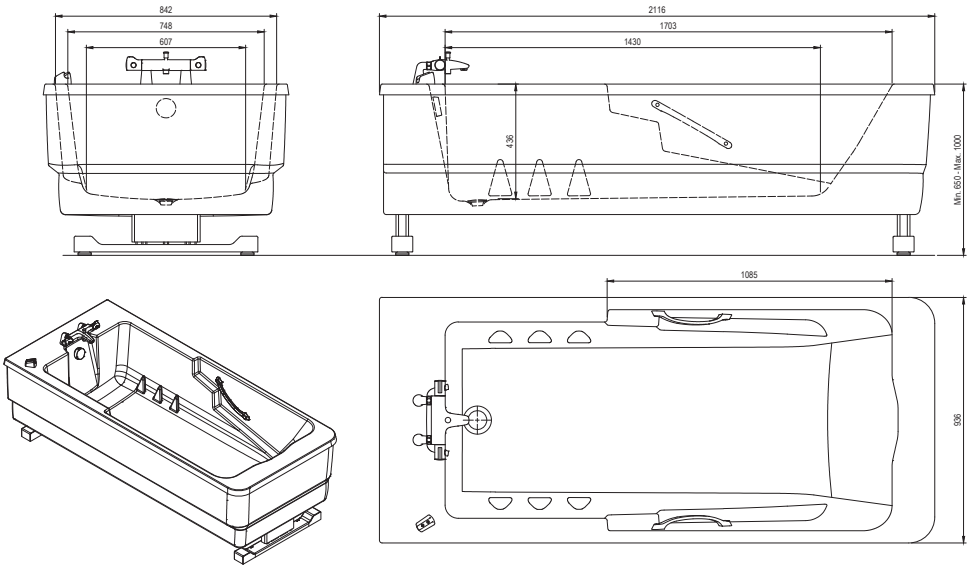

Fixed height bathtub,
TR Ecoline

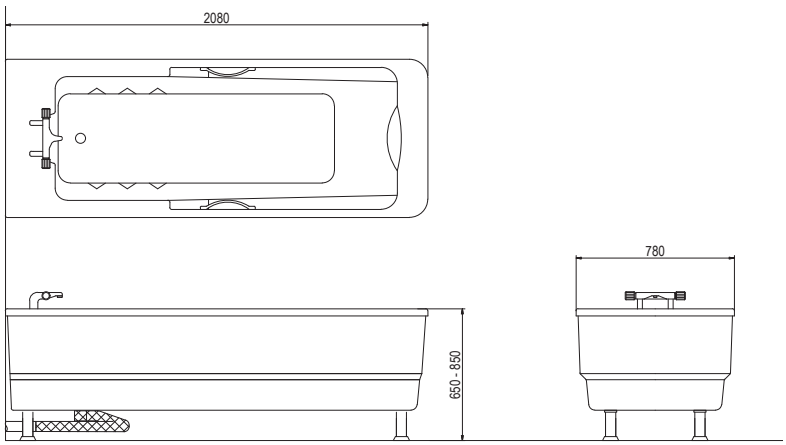

User Instructions

Fill the bathtub with water:

- Turn the overflow valve to close the drain plug.
- Start filling the tub with water by turning the OPEN and CLOSE knob on the thermostatic mixer.
- Adjust the outlet water temperature by turning the temperature knob on the thermostatic mixer. Maximum outlet temperature is 43°C.
- Fill the tub with water to required level and turn OFF the thermostatic mixer by turning the OPEN and CLOSE knob on the thermostatic mixer.
- Check the water temperature physically, by hand or with a thermometer.
- Empty the tub by turning the overflow valve counterclockwise to open the drain plug.

Enter and leaving the bath:

<u>If the patient enters the bath themselves with assistance from caregiver:</u>

- Lower the tub to the lowest position with the hand control allowing the patient to enter the bath with assistance.
- The built-in handles inside the tub provide the patient extra support.
- Place the hand control back onto the bracket on the maintenance hatch at the back of the tub.

<u>If the patient is assisted into the bath with a lift system:</u>

- The lifter must be positioned close to the side of the bathtub.
- The bathtub should be in a convenient working height and be adjusted by pressing the UP or DOWN button.
- Place the hand control back onto the bracket on the maintenance hatch at the back of the tub.

Warning

- Always check the water temperature by hand or a bath thermometer before the patient gets into the bath. This is to prevent patients from being scalded or shocked by hot or cold water.
- The patient shall never be left unattended.
- Only enter and step out of the bath when the bath is in the lowest position.
- NEVER enter or step out of the bath when it is in a raised position.
- Always check the water temperature by hand or a bath thermometer before the patient gets into the bath. The thermostatic mixer is pre-set to approximately 43°C under ideal conditions at the factory.
- Make sure that the bathtub is raised and lowered evenly, both at head end and foot end of the tub. The patient must not use the tub if it’s not in level.

User Instructions

Foot support:
The foot support can be placed in three different positions for best foot support.

- If the patient is placed on a stretcher lift or on a combi lift with side parts during the bath the foot support must be removed from the tub before the lift is lowered into the water.
- The foot support can be used and placed into required position when a chair lift is used.

Showering:
- The shower handle is used to shower the patient and to rinse equipment after cleaning.
- Hold the shower handle over the tub and pull the diverter knob on the thermostatic mixer to start the shower.

Cleaning system:
Only available for TR Comfortline and TR Spaceline, height adjustable bathtub.
The cleaning system is automatically mixed with cold water in a pre-set concentration of approximately 2% to minimize inhalation. Use only liquid, non-abrasive, non-scouring, commercially available detergents to clean the bathtub, controls and foot support.

Apply detergent according to instructions from the detergent supplier.

Fittings:
Plated as well as color coated surfaces can get damaged by acidic and abrasive detergent and scouring pads. We recommend clear water and a soft cloth. If the fittings are heavily soiled, clean with soapy water or vinegar and rinse with clear water and rub dry.

User Instructions

Air-Spa (only available for TR Comfortline and TR Spaceline):
Air Spa system – Genesis (Option)
From 2018-02-23 onwards, serial no: 1802-204609.

Note:
The operating time is restricted for safety reasons.
The Air spa system switches OFF automatically after 30 minutes. To start the Air Spa system again, press the ON/OFF button.

Blower ON/OFF:
Press the ON/OFF button once to start Blower & Timer. The blower will start at the highest intensity Level. Press the ON/OFF button again to turn the System OFF. 30 minutes after turning the system OFF the dry blowing function starts.

LED indicator (ON/OFF button):
Constant Green light on the blower symbol indicates that the blower is working. When the blower is turned off the LED light flashes until the dry blowing function starts.

Blower variable speed:
Press and hold to lower and increase the speed.
Release the button when required speed is reached.

Blower pulse function:
Press the button once and the speed varies from highest to slowest speed continuously over a set period of time.

Dry blowing function:
The dry blowing function starts 30 minutes after the blower has been turned OFF and lasts for approximately 2 minutes.

Control panel

Connection diagram

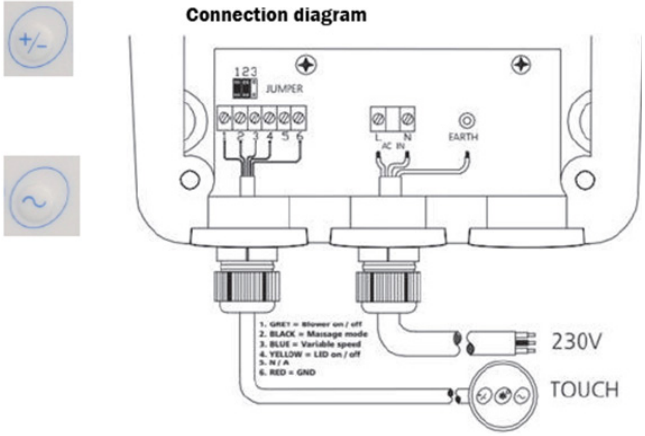

Warning

- Always check the water temperature by hand before using the shower on the patient to prevent patients from being scalded or shocked by cold/hot water.
- Never use the cleaning system on patients, ONLY on the equipment.
- The user/operator is responsible for selecting detergents and bath additives. Please read instructions in the manual from the detergent supplier and find out whether the product is suitable.

User Instructions

Cleaning the Air Spa system

The Genesis Air Spa system on the TR Comfortline and TR Spaceline utilises a blower that generates air bubbles through small air jets in the bottom of the bathtub.

The air jet has an integrated backflow prevention (stainless-steel ball). The backflow prevention keep water out of the air system, insuring a clean and dry system.

Cleaning the bathtub:

1. Drain the water from the bathtub and remove any visible debris. Wait until the dry blowing function is finished.
2. Clean the surfaces of the bathtub with soap or detergent, follow instructions from the supplier of the detergent, rinse with fresh water and drain.Don't press the air jet outlet during cleaning, just wipe. Pressure might damage the air jet.
3. More rarely, after severe contamination spray cleaning detergent into the air jets.
   Fill the tub with water and start the air spa system.
   Run the system for 2-3 minutes and then turn it off.
   Clean the tub again according to instructions 1-3.

Important:
If the stainless steel is missing inside the air jet a new one must be ordered

LED control buttton

LED light
Available for TR Comfortline and TR Spaceline and TR Ecoline.

LED Color Light System (option), from 2018-02-23 onwards, serial no: 1802-204580

LED light

Use:
The light system touch control is located either at the head end (on the side of the tub covers) or at the foot end (on the edge of the tub, depending on bathtub model). The LED light system allows the user to choose 7 different colors, which will illuminate the water via a built- in flood light until the system is turned OFF.

1. The light system is turned ON by pressing the power switch button. The LED light system starts in multi colour mode and will automatically rotate between the different colors.
2. An individual color can be selected by pressing the button several times.
3. Press the button once for each colour.

The LED light system will be turned OFF when you press the button the ninth time

User Instructions

Option - Music
From serial no 101649 onwards

Operating instructions Bluetooth:

- Press the ON/OFF button (3) to start the system. The Bluetooth blue LED light will be switched on and an audible tone will be heard. Bluetooth pairing is ongoing.
- Turn on the Bluetooth on your music device. Scan for Bluetooth devices.
- Select VX502.
- If the VX502 device is not shown on the music device, refresh the search on your music device.
- Enter passcode '0000' if required.
- Once connected, you can start playing your favorite music.
- Press PLAY/PAUSE button (5) to start playin music. Press once again to pause the music.
- Press NEXT TRACK/PREVIOUS TRACK button (4) / (7) to change track. Press and hold for fast forward / rewind.
- Press VOLUME UP button (2) to raise the volume and VOLUME DOWN (6) to lower volume.

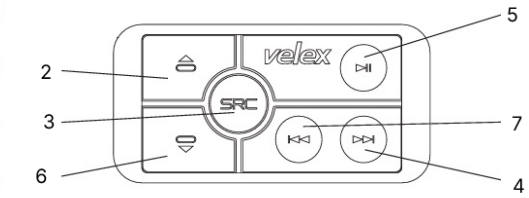

User Instructions

Autofill (Available for both TR Comfortline and TR Spaceline, height adjustable bathtubs and TR Ecoline, fixed height bathtub).

Autofill (option)
From 2018-02-23 onwards, serial no. 1802-204609.
The Autofill allow staff to pick up and prepare the patient for bathing while the tub is being pre-filled.

General information:
The control panel (see picture) is placed at the tap end.

Operation:
- Button no.1 = Water will be filled to level 1.
- Button no.2 = Water will be filled to level 2.
- Button no.3 = Shower. Pull the knob on the thermostatic mixer.

Note:
When autofill is used the thermostatic mixer must be fully open. If the mixer isn´t open the autofill will not work.

Bathtub filling:
Press button no.1 and set the thermostatic mixer to desired temperature.
Test the water temperature by hand or with a thermometer.
The bathtub will be prefilled to level no.1.
In the meantime, the patient can be transferred to the bath.
When the water reach level no.1 the bathtub filling will stop automatically.

Press button no.2 to start filling the bathtub to level no.2 just below the overflow drainage. When the water reach level no.2 the bathtub filling will stop automatically. The auto filling can be stopped at any time by pressing buttons 1 & 2.

Showering:
Press button no.3 and water will come out from the thermostatic mixer. Pull the diverter knob on the mixer to activate the shower. Press button no.3 again to turn the shower OFF

Warning

- Always check the water temperature by hand or a bath thermometer before the patient gets into the bath. The thermostatic mixer is pre-set to approximately 43°C under ideal conditions at the factory.

System components

Lifting columns

Only company engineers and/or trained staff are authorized to carry out any work on the drive system (lifting columns and control box). Do not attempt work on the lifting columns without consulting TR Equipment as this will void the warranty.

Thermostatic mixer

See separate operating manual, supplied at delivery. TR Equipment refers to the separate operating manual for the thermostatic mixer. When routine maintenance shall be carried out read the Routine maintenance chapter and the original operating manual for the thermostatic mixer.

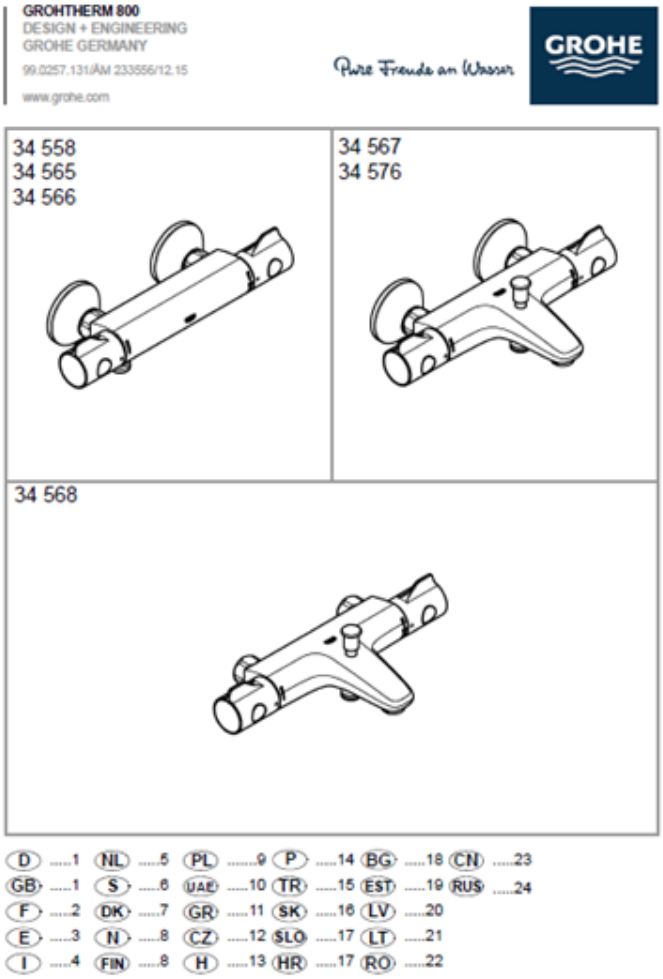

Product label

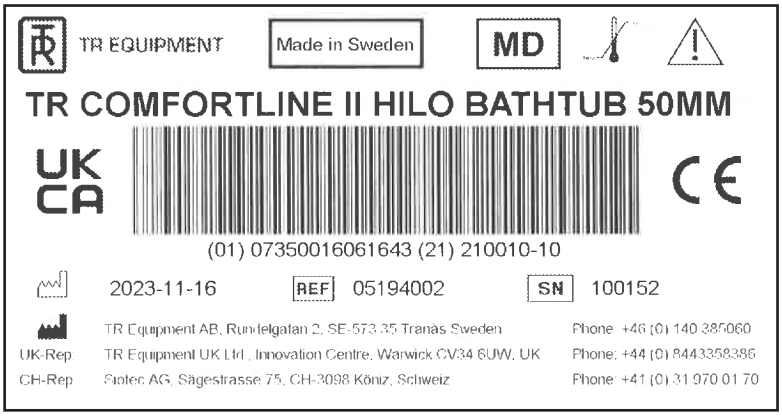

UDI (Unique Device Identification) can be found within the barcode human readable text. It contains:

- (01) EAN code
- Date of Manufacture. The date is in the format YYYYMMDD Y = Year, M = Month and D = Date.
- Serial Number displayed as six digit code.

Product label

Table of Symbols

TR EQUIPMENT	TR Equipment Logotype		Visual inspection
MD	Medical equipment according to MDR 2017/745		Read the manual
CE	CE marking		Maximum patient weight 150kg
	Manufacturing date		WEEE Symbol May not be discarded in domestic waste
	Factory address	UK CA	UK Conformity Assessment
REF	Part number		Refer to Instruction manual (IFU)
SN	Serial number	COLD WATER 87 psi MAX 6 bar MAX	Maximum water pressure. Cold water.
HOT WATER 175°F MAX 80°C MAX 87 psi MAX 6 bar MAX	Maximum pressure and temperature. Hot water.		Cleaning shower hose
	Detergent filling.	220-240V - 50/60Hz - 10A CLASS I	Alternate current 220-240V – 50/60Hz Protective earth Class I
100-120V - 50/60Hz - 10A CLASS I	Alternate current 110-120V – 50/60Hz Protective earth Class I		Applied part B

Routine maintenance

Before every use:
Visual inspection:
- Make sure that the bathtub stands securely on the floor.
- Make sure that the tub is in its lowest position.
- Make sure that the tub is in level when raising and lowering the tub.
- Make sure there are no nicks or cracks on the tub which may scratch the patient.
- Make sure that all electrical cords are in good condition and without damages.
- Make sure that the connecting- and shower hoses do not leak.
- Check the water temperature by hand or with a bath thermometer.

Daily maintenance
- Clean the tub after every use. Avoid abrasive cleaners which may scratch the surface of the tub and side covers.
- Lower the tub to its lowest position after every use and make sure all valves are closed.
- Clean the strainers on the shower handle by rubbing it with your thumb.

<u>If your Comfortline II or TR Spaceline is equipped with a cleaning system:</u>
Make sure there is cleaning liquid in the cleaning container.
Clean the strainers on the cleaning shower handle by rubbing it with your thumb.

Thermostatic mixer:
- Exercise the mixer by moving the temperature control rapidly from cold to hot and hot back to cold several times pausing at extreme.
- For maintenance of the thermostatic mixer, read manual from the supplier of the thermostatic mixer (manual enclosed at delivery).
- If the bathtub is used in an area with hard water, ensure that the mixer cartridge and strainers are clean. See instructions in the manual from the manufacturer of the thermostatic mixer (manual supplied at delivery). This must be done by a qualified person.
- If you have a FMM9000E Antibactus thermostatic mixer, also read manual from the manufacturer how to flush it and restore it correctly (manual enclosed at delivery).
- Contact your TR Equipment representative if you need new manuals.

Warning
- Always check the water temperature by hand or a bath thermometer before the patient gets into the bath. The Grotherm 800 thermostatic mixer is pre-set to approximately 43°C under ideal conditions at the factory.
- Scalding risk when flushing with hot water!
- Shower hoses on the TR bathtubs manage 60°C /140°F for 10 minutes.
- Maintenance and/or repairs may only be carried out by the manufacturer or qualified staff authorised by the manufacturer. Otherwise warranty expires immediately.

Routine maintenance

Monthly maintenance:
- Monthly maintenance must be performed by On-site engineer or trained staff.
- Repeat Before every use and Daily maintenance.
- Make sure that the supply hoses for Hot- and Cold water are fitted correctly and do not leak.
- Make sure that the power cord is in good condition and has no damages.

Annual maintenance
Maintenance and Service manual including check list is available. Contact TR Equipment for an updated manual.

Annual maintenance and inspection must be performed by a qualified technician according to local regulations.

- Repeat **Before every use, Daily maintenance and Monthly maintenance.**
- Inspection of the electrical installation, power cord, earth cables and equipment must be performed by a qualified electrician.
- Inspection of the plumbing installation, flexible connection hoses, shower hoses, pipe interrupters, check valves (supplied by the installer) etc. must be performed by a qualified plumber.
- Make a scalding test by shutting OFF the cold water. The thermostatic mixer shall shut OFF if only HOT water is supplied. **If it doesn't shut OFF the mixer or cartridge must be replaced.**
- There should be an annual inspection of the electrical installation and of the devices according to local requirements.

TR Comfortline and TR Spaceline, height adjustable bathtubs:
- Initialise/calibrate the lifting columns according to the instructions described in the Operating manual. **See Initialisition / Calibration** in the table of content.
- If your TR Comfortline II or TR Spaceline is equipped with cleaning system, check the OPEN/CLOSE valve to see if it open and close the valve properly. Replace valve stem if necessary

- Iodine, Bromine and Methylene blue might discolor the bathtub.
- Mechanical parts inside the tub are maintenance free.

Routine maintenance

Replacement of parts

Every 3 years:
- Replace the Silver colored shower hose
- Replace shower handle
- Replace connecting hoses for hot and cold water

If bathtub is equipped with cleaning system (TR Comfortline and TR Spaceline, height adjustable bathtubs):
- Replace the yellow cleaning shower hose and shower handle.
- Replace the valve stem on the Open and close valve.

Every 5 years:
- TR Equipment recommends replacement of the thermostatic mixer.

Maintenance after 10 years
Maintenance and inspection must be performed by qualified technician and according to local regulations.

Repeat Before every use, Daily maintenance, Monthly maintenance, Annual maintenance, Maintenance 3 years and Maintenance 5 years.

Warranty:
- Maintenance and/or repairs may only be carried out by the manufacturer or qualified staff authorised by the-manufacturer. Otherwise warranty expires immediately.
- If the thermostatic mixer is supplied by TR Equipment, it´s covered by warranty but problems related to the quality of the water is not covered by the warranty from TR Equipment.

Warning
- Scalding risk when flushing with hot water!
- The shower hoses on the TR bathtubs withstand 60°C /140°F for 10 minutes.

Caution
- Maintenance and/or repairs may only be carried out by the manufacturer or qualified staff authorised by the manufacturer. Otherwise warranty expires immediately.
- In healthcare applications such as hospitals, aged person facilities, residential care homes, etc. and in any other applications where the user is similarly at risk, irrespective of supply and usage conditions or the evidence of in-service tests, the critical components must be replaced at intervals of no more than 5 years.

Cleaning instructions

Please note: The user/operator is responsible selecting the correct cleaning liquid / detergent and additives according to local regulations and safety standards.

Please read the cleaning liquid/detergent supplier´s instruction manual and find out whether the product is suitable for use with this product.

General guidelines for cleaning liquid/detergent:

- No solvent based or strong alkaline cleaning liquids, use of these products may cause damage.
- Nonabrasive type of detergent
- Less than 5 Wt% chloride content
- Less than 3 Wt% alcohol content

Clean the tub after every use. Use patient shower handle to rinse all surfaces with fresh water. Avoid abrasive cleaners which may scratch the surface of the tub and side covers.

Warning

- Never use flushing water when cleaning the tub side covers and the underside of the tub. Only use flushing water in the tub.

Disposal / Recycling

Recycling of the equipment
Recycle the fiberglass and components on the TR bathtubs according to local regulations.

Recycling of packaging materials.
- Cardboard materials shall be recycled as cardboard.
- The wooden pallet shall be recycled as wooden materials.

Important
- When replacing electrical and electronical parts / components, deposit the parts / components in accordance with the national regulations.

Maintenance record

Date	Description	Signed by

Training record

Date	Description	Signed by

Thank you for reading this document.

If you have questions regarding operation or maintenance of your equipment and cannot find the answer in this manual, please do not hesitate to contact us!

HEAD OFFICE TR EQUIPMENT AB, SWEDEN Phone: +46 140 77 00 40 E-mail: info@trequipment.se Website: www.trequipment.com
GROUP SUBSIDIARIES TR GROUP INC, USA Phone: +1 (800) 752 9600 TRANSPOREHAMED GMBH, GERMANY Phone: +49 (0) 212 6458500