TR 2000 / 3000 Shower Trolleys

Instructions for use - English

Always study this manual carefully before operating the shower trolley.

The operator/user must always have access to the operating manual.

The shower trolley is intended for professional use only where the patient will be under supervision of trained personnel.

Operating instructions and recommended maintenance procedures are explained in the following pages.

If you have any questions regarding the operation or maintenance of your shower trolley and cannot find the answer in this manual, please contact us.

The shower trolley is designed for years of trouble-free operation, with proper use and maintenance.

Max patient Weight: 200 kg / 440 lbs

Always read the user manual

Always make sure that you have the correct version of the manual and it is mandatory to read the Instructions before the first time of using the equipment.

MD

Registered at Medical Products Agency, Sweden as a MDR Class 1 product according to MDR 2017/745. TR reserves the right to make design changes and/or improvements without notice.

IFU Rev 2026-10

Table of Contents

Manufacturer	Page 4
Introduction	Page 5
Intended Use	Page 6
Unpacking	Page 8
Calibration / Initialisation	Page 8
Safety instructions	Page 9
• General safety instructions	Page 9
• In case of accident	Page 9
Features and controls	Page 10
Product description	Page 11
• General product description TR 2000	Page 11
• General product description TR 3000	Page 11
• Options / accessories	Page 12
Technical specification	Page 13
• General technical specifications	Page 13
• Possible combination with other equipment	Page 14
• Dimensions TR 2000 (standard version)	Page 15
• Dimensions TR 3000 (standard version)	Page 16
User instructions	Page 17
• Height adjustment TR 2000	Page 17
• Height adjustment TR 3000	Page 17
• Emergency stop	Page 18
• Charging instructions	Page 19
• Side rails	Page 21
• Corner bumper wheels	Page 21
• Castors	Page 22
• Tilt function	Page 23
• Drainage	Page 23
Patient handling	Page 23
• Patient handling – From wheelchair onto shower trolley	Page 24
• Patient handling – Bed transfer onto shower trolley	Page 25
• Patient handling – Showering the patient	Page 26
Product label	Page 27
Table of symbols	Page 28

Table of Contents

Routine maintenance	Page 29
• Before every use	Page 29
• Daily maintenance	Page 29
• Monthly maintenance	Page 29
• Annual maintenance	Page 30
• Maintenance every 3 years	Page 30
• Maintenance every 5 years	Page 30
• Maintenance every 10 years	Page 30
Cleaning instructions	Page 31
Disposal / Recycling	Page 33
Training record	Page 34
Maintenance record	Page 35

Manufacturer

TR Equipment AB
Rundelgatan 2
SE-573 35 Tranås
Sweden

Phone: +46 (0)140 77 00 40
www.trequipment.com
info@trequipment.se

Group subsidiaries: **USA** TR Group Inc.	Phone: +1 (800) 7526900 www.trequipment.com information@trequipment.com

Introduction

Dear Customer,

Thank you for choosing one of our quality products. We hope you enjoy the TR 2000/3000 shower trolley.

This manual shall, in conjunction with staff training, ensure that the operator/user is always using and/or operating the TR 2000/3000 correctly.

New users must be trained by qualified and experienced staff.

TR Equipment AB requires that each user has read and understands the entire operating manual and that they can apply the instructions as specified. This applies to anyone who was not present at the in-service training.

This instruction manual should generally be kept easily accessible for every user. Copying the whole manual is encouraged since its sole purpose is to improve the standard of training and safety.

Please order another copy from us if the instruction manual is lost or unusable, or if it has become illegible over time.

If you need further information, do not hesitate to contact TR Equipment AB or one of our qualified partners.

Always read the user manual

Always make sure that you have the correct version of the manual and it is mandatory to read the Instructions before the first time of using the equipment.

⚠ Warning

- Mandatory to read the operating manual before using the equipment.
- Make sure you have read, understand, and applied the information on the following pages before using the shower trolley.

Intended use:

TR 2000 Hydraulic shower trolley

- The TR 2000 shower trolley is a hydraulic operated shower trolley.
- The TR 2000 shower trolley is intended to ease transferring and caring of the patient. Typical situations where the TR 2000 shower trolley is used include transporting the patient to and from a shower area, showering and cleaning the patient, dressing the patient, and changing incontinence briefs/pads.

Typical situations where the TR 2000 shower trolley is used includes:

- Transporting the patient to and from a showering area.
- Showering and cleaning the patient.
- Dressing the patient.
- Changing incontinence briefs/pads

- The TR 2000 is NOT intended to be used with patients that exceed a weight of 200kg.
- The patient is typically a person who is unable to take care of their own personal hygiene.
- The TR 2000 is only intended to be used for short term use <60min when in contact with breached or compromised skin.
- The TR 2000 is intended to be used indoors, including wet rooms, in all types of care facilities and private homes.
- The user is any adult person who is capable of reading and understands the operating manual and is qualified to care for dependent persons/patients.
- Before using the TR 2000, the user must read and understand the operating manual.

Warning

- Mandatory to read the operating manual before using the equipment
- Make sure you have read, understand, and applied the information on the following pages before using the shower trolley.

Intended use:

TR 3000 battery operated shower trolley

- The TR 3000 shower trolley is a battery-operated shower trolley.
- The TR 3000 shower trolley is intended to ease transferring and caring of the patient. Typical situations where the TR 3000 shower trolley is used include transporting the patient to and from a shower area, showering and cleaning the patient, dressing the patient, and changing incontinence briefs/pads

Typical situations where the TR 3000 shower trolley is used includes:

- Transporting the patient to and from a showering area.
- Showering and cleaning the patient.
- Dressing the patient.
- Changing incontinence briefs/pads.

- The TR 3000 is NOT intended to be used with patients that exceed a weight of 200kg.
- The patient is typically a person who is unable to take care of their own personal hygiene.
- The TR 3000 is only intended to be used for short term use <60min when in contact with breached or compromised skin.
- The TR 3000 is intended to be used indoors, including wet rooms, in all types of care facilities and private homes
- The user is any adult person who is capable of reading and understands the operating manual and is qualified to care for dependent persons/patients.
- Before using the TR 3000, the user must read and understand the operating manual.

Warning

- Mandatory to read the operating manual before using the equipment
- Make sure you have read, understand, and applied the information on the following pages before using the shower trolley.

Unpacking

TR 2000/3000 shower trolley is delivered on a wooden pallet with a cardboard box around it.
If the cardboard box is wrapped in plastic carefully cut and remove the plastic.

Start unpacking the TR 2000/3000 shower trolley by removing the lower carton staples with a pliers.
DO NOT use any sharp tools that may scratch the shower trolley.

Carefully lift off the cardboard frame from the pallet.
When lifted, do so briefly and use at least two people.
Carefully remove the TR 2000/3000 from the pallet.

Warning

- When moving the TR 2000/3000 from the pallet, two people are required.

Calibration / Initialisation

When the emergency stop has been activated it could be necessary to initialise the lifting column.

- Lower the lifting column to the lowest position.
- Press the DOWN (-) pedal once.
- Press the DOWN (-) pedal once more.
- When you hear two short signals the shower trolley is ready to be used again.

TR 3000 as standard equipped with a foot control

TR 3000 with hand control (Option)

Safety Instructions

General safety instructions

- Only qualified staff, who understand all operating and safety procedures may operate the shower trolley.
- Always physically check the water temperature before and during showering.
- The patient must be positioned comfortably on the stretcher mattress, with side rails securely locked.
- Make sure that all parts that comes in contact with the patient are intact and without sharp edges.
- Ensure that the shower trolley can be moved, raised, or lowered safely to avoid any pinch injuries on the patient.
- Castor brakes must be securely locked on the shower trolley before transferring a patient and once in position over a drain.
- Operate the shower trolley carefully when transporting patients through narrow corridors or over irregular uneven surfaces.
- Wipe dry under the stretcher to prevent water dripping on the floor.
- The shower trolley must be cleaned and wiped dry after every use.
  See cleaning instructions in table of contents.
- Avoid skin or eye contact with detergent, which is highly caustic. If contact is made, rinse immediately with excess water. If irritation occurs, consult a doctor. Always read and follow detergent supplier instructions.
- Never clean mattress and pillow in gas sterilization unit. Mattress and pillow will explode.
- It is recommended that the batteries on the TR 3000 shower trolley are charged daily or whenever the shower trolley is not in use. The batteries cannot be overcharged.
- The TR battery charger is the only approved charger for the TR 3000 battery operated shower trolley.
- Do not use battery charger in wet or damp areas – Potential shock hazard.
- Make sure that all castors are clean, in place and free from damages.
- Make sure that siderails are in place and free from damage and all screws are tightened.
- Make sure that mattress and pillow must be kept well maintained in place.
- The shower trolley must be inspected visually for sign of wear.
  The shower trolley should not be used if defects are noted. Prompt service is required.

If you have questions regarding operation or maintenance of your TR 2000/3000 shower trolley and cannot find the answer in this manual, please contact us!

In case of accident

Note: In case of a serious incident when using the TR 2000/3000 shower trolley, this should be reported to the manufacturer and to the local authorities where you are established.

Warning

- Mandatory to read the operating manual before using the equipment
- Never sit at the ends of the stretcher.
- Never leave the patient unattended.
- NEVER use the TR 2000/3000 shower trolley in any way that varies from the safety precautions and operating procedures detailed in this manual.

Features and Controls

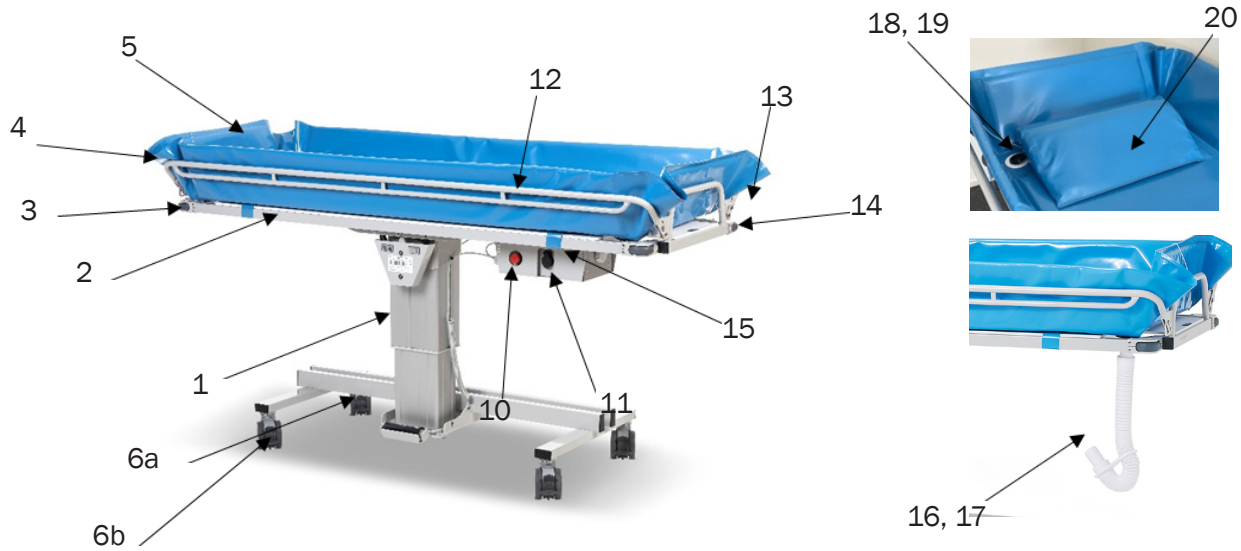

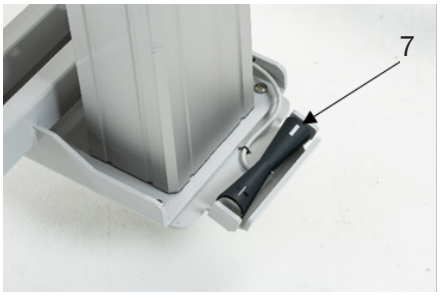

TR 3000

TR 3000

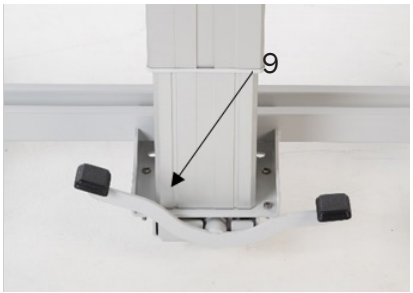

TR 2000

1	Lifting column
2	Stretcher
3	Tilt handle (under mattress and plastic plate)
4	Short end
5	Mattress
6a/b	Castor with brake. Red pedal
6b	Straight steering castor (option) Black pedal
7	TR 3000 Foot control UP (+) / DOWN (-)
8	TR 3000 Hand control Up/DOWN (Option)
9	TR 2000 Foot pedal UP/DOWN

10	Emergency stop
11	Charging connector
12	Side rail
13	Side rail lock
14	Bumper wheel
15	Mattress attachment straps
16	Drainage hose
17	Hose holder
18	Drainage
19	Drainage plug
20	Pillow

Product description

TR 2000 – Shower trolley, hydraulic operated

Height adjustable shower trolley. As standard equipped with side rails in stainless steel, four castors with brake, hydraulic pump, Blue mattress, Blue pillow, drainages (2pcs), drain plugs (2pcs), drain hose 1M (1pcs) and hose holder (1 pcs).

TR 2000 is available in four different lengths:

TR 2000-S, 1600mm	Part.no: 0540015
TR 2000, 1900mm	Part.no: 0540010
TR 2000-L, 2100mm	Part.no: 0540016
TR 2000-W, 1950mm	Part.no: 0540017

Options

- Straight steering castors (2pcs)
- Drainage hose 2.5M
- Wedge pillow 15°
- Mattress fasteners and straps
- Movable backrest
- High siderail

TR 3000 – Shower trolley, battery-operated

Height adjustable shower trolley. As standard, equipped with four castors with brake, batteries, battery charger, Blue mattress, Blue pillow, drainages (2pcs), drain plugs, drain hose and hose holder.

TR 3000 is available in three different lengths:

TR 3000-S, 1600mm	Part.no: 0540005
TR 3000, 1900mm	Part.no: 0540000
TR 3000-L, 2100mm	Part.no: 0540006

Options:

- Straight steering castors (2pcs)
- Hand control UP/DOWN
- Drainage hose 2.5M
- Wedge pillow 15°
- Mattress fasteners and straps
- Movable backrest
- High siderail

Contact TR Equipment or your TR Equipment representative for part numbers.

Options / Accessories

Wedge pillow 15°

Movable backrest

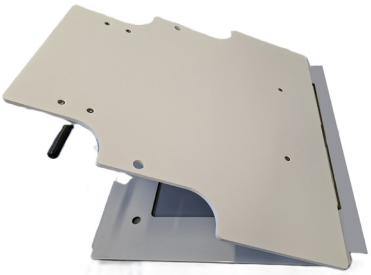

High siderail

Matress fastener and straps

Technical specification

TR 2000/3000 – Shower trolley	
Maximum working load	200Kg
Control TR 2000	Hydraulic pump
Control TR 3000	Foot control for height adjustment
Operating range	600 – 900mm
Operating time UP, TR 3000	30 seconds
Operating time DOWN, TR 3000	30 seconds
Operating time UP, TR 2000	18 pumps
Operating time DOWN, TR 2000	15-20 seconds (depending on weight)
Floor clearance	160mm
Mattress and Pillow	Flame retardant PVC material
Structure	Powder coated, zinc plated and stainless steel
Protection class	IP X5

TR 2000-S/ TR 3000-S – Dimensions and weights	
Length	1600mm
Patient work area	1460 × 560mm
Width	640mm (with siderails upright)
Weight	73kg / 80kg

TR 2000/TR 3000 – Dimensions and weights	
Length	1900mm
Patient work area	1760 × 560mm
Width	640mm (with siderails upright)
Weight	79kg / 88kg

TR 2000-L/TR 3000-L – Dimensions and weights	
Length	2100mm
Patient work area	1960 × 560mm
Width	640mm (with siderails upright)
Weight	83kg / 92kg

TR 2000-W – Dimensions and weights	
Length	1950mm
Patient work area	1780 × 640mm
Width	695mm
Weight	82kg / 91kg

Technical specification

TR 3000 Voltage	
Supply voltage	24 VDC, 7Ah (Lead-acid, rechargeable)
Supply voltage TR3200-R	24 VDC, 4 Ah (Lithium, rechargeable)
Battery charger input	100-240VAC, 50/60Hz
Battery charger out put	24VDC

Technical life span	10 years if the product is serviced and maintained according to instructions in this manual.

Transport and storage Ambient temperature	-20°C - +70°C	-4°F - +158°F

Possible equipment combinations	
TR 2000 / TR 3000	Shower panel TR 2810

Contact TR Equipment or your TR Equipment representative for part numbers.

Technical specification

TR 2000 Shower trolley

Standard dimensions (see technical specification for TR 2000-L, -W & -S)

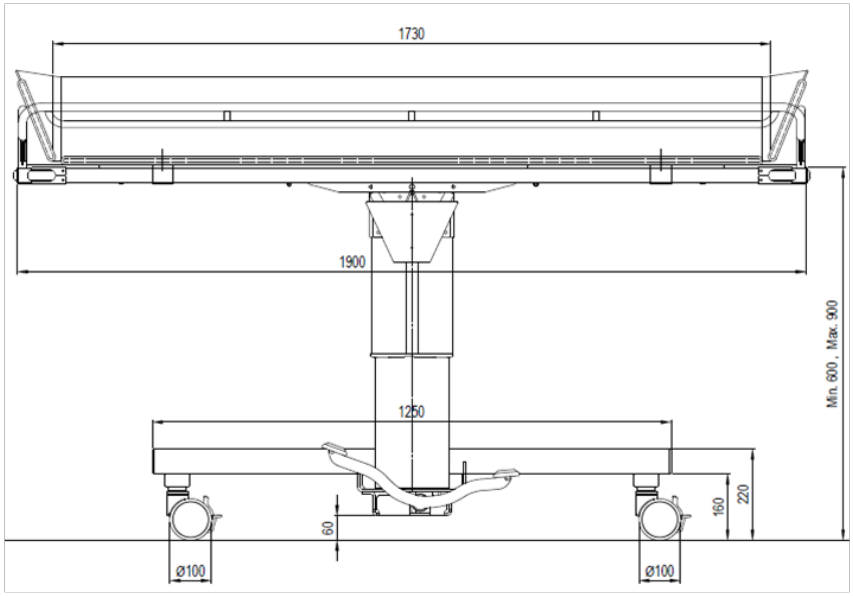

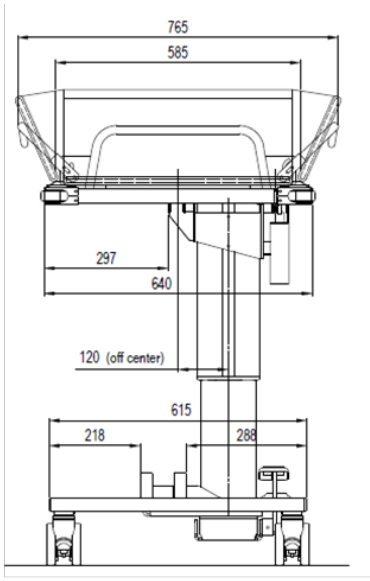

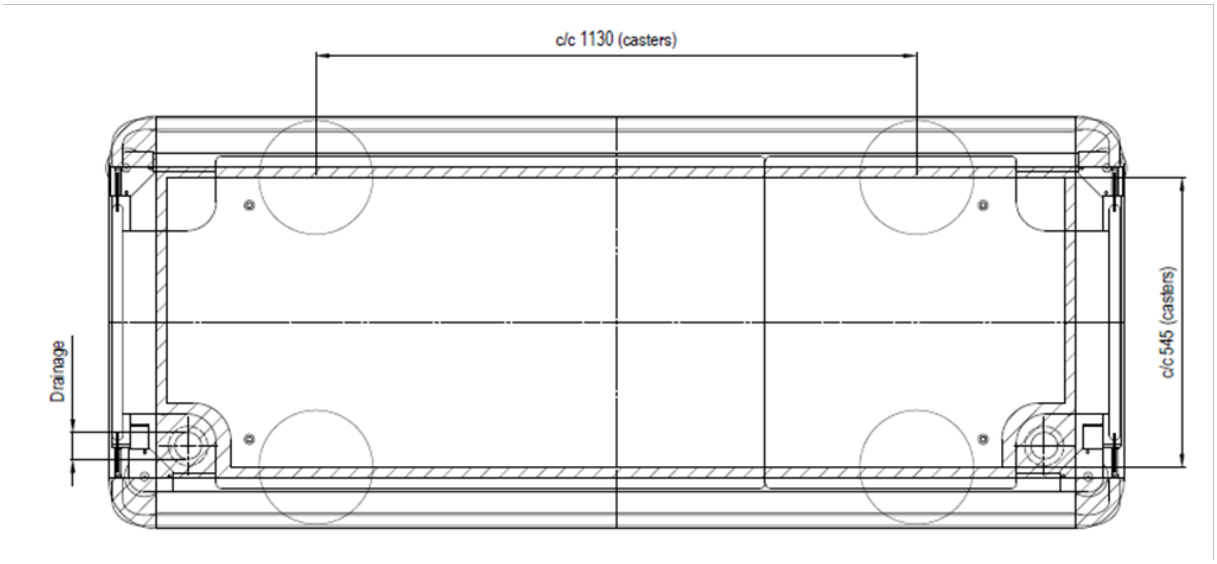

Technical specification

TR 3000 – Shower trolley

Standard dimensions (see technical specification for TR 3000-L & -S)

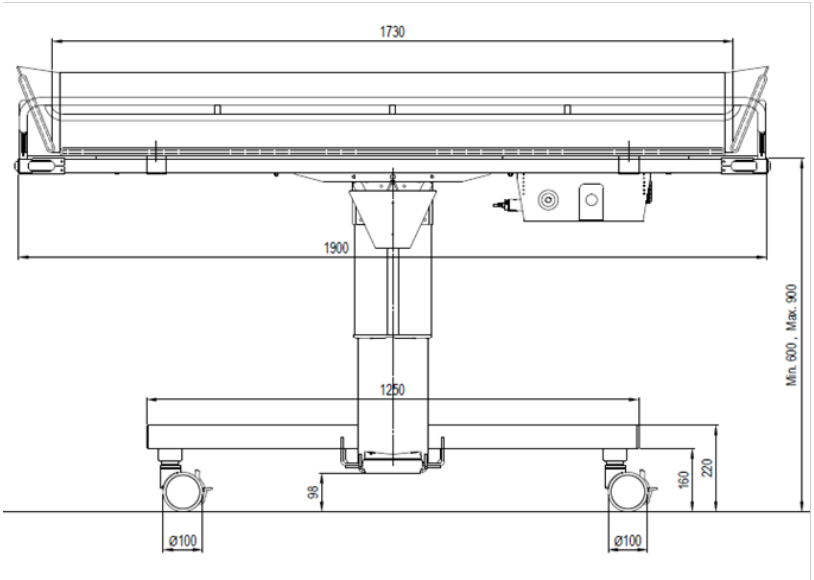

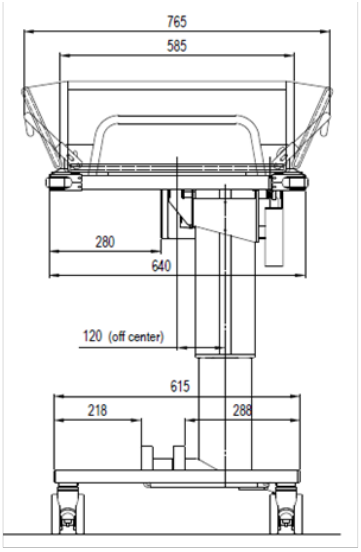

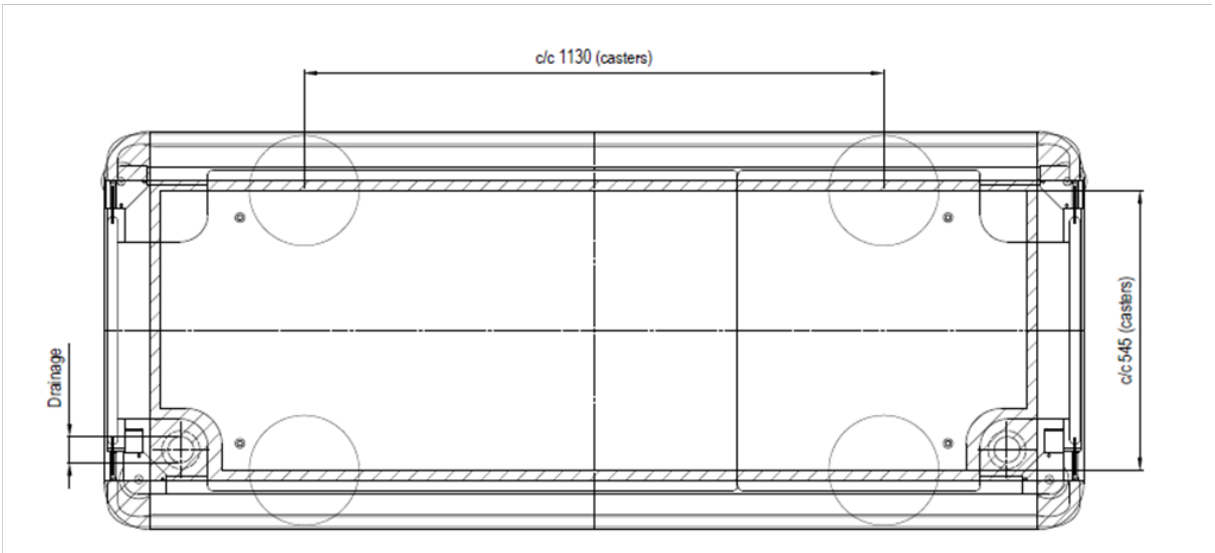

User Instructions

TR 2000 – Height adjustment

Raise or lower the shower trolley with the foot pedal.

- Raise the stretcher by pumping the UP foot pedal
- Lower the stretcher by pressing the DOWN foot pedal downwards.

The stretcher lowers smoothly when the pedal is pressed downwards and stops immediately when the pedal is released.

When the stretcher hits the tops position a safety valve opens in the hydraulic piston and the stretcher stops moving upwards.

The shims in the pillar are very tight adapted and this might cause that the stretcher needs help to be lowered the first times of use.

UP / +

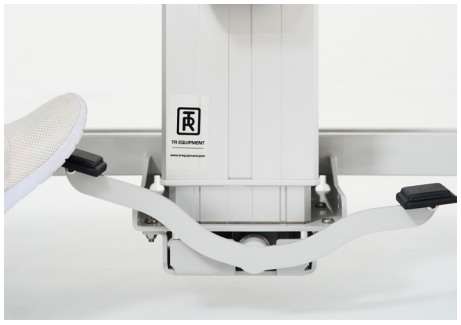

DOWN / -

TR 3000 – Height adjustment

Raise or lower the shower trolley with the foot pedal

- Raise the stretcher by pressing the UP symbol (+) on the foot pedal.
- Lower the stretcher by pressing the DOWN symbol (-) on the foot pedal.

The stretcher raises and lowers smoothly when the foot pedal is pressed and stops immediately when you stop pressing the foot pedal. When the stretcher reaches the highest position, it will automatically stop.

UP / +

DOWN / -

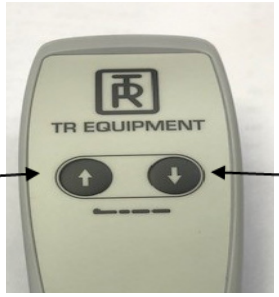

UP / +

DOWN / -

Hand control (Option)

Warning

- Maximum working load = 200kg

User Instructions

TR 3000 – Emergency stop

If the lifting column on the shower trolley, for some reason must be stopped immediately and it doesn't help to stop pressing the hand control, press the emergency stop on the battery box.
The emergency stop will cut the power supplied to the lifting column.
To release the emergency stop, turn the emergency stop clockwise.

If the problem remains, immediately contact TR Equipment or a TR Equipment representative for repair.

If you hear a beeping sound when you start using the shower trolley again, calibrate the lifting column. See table of contents for instructions.

Emergency stop

Emergency stop

User Instructions

TR3000 - Charging instructions onboard batteries:

Charge the TR 3000 shower trolley daily or when the low battery audible tone sounds. The batteries cannot be overcharged. The battery charger is equipped with a magnetic connector to avoid damages on the charger if the shower trolley will be moved during charging.

- Use only the battery charger supplied by TR Equipment.
- Connect the charger to the charging connector on the shower trolley before connecting the charger to the mains supply.
- When the battery charger is properly connected the charging indicator on the charger will be lit. If not, make sure the plug on the charger is properly connected.
- The charging indicator shows the charging cycles. Yellow while charging and Green when the batteries are fully charged.
- Minimum charging time is 8 hours. The batteries cannot be overcharged and if possible best practice is to always charge when not in use.
- When the charging is completed, disconnect the charger from the mains, before you disconnect the charger from the shower trolley.
- A flat fuse (15A) is connected between the batteries. The batteries are placed under the mattress and plastic plate inside an enclosure mounted on the stretcher frame.
- The charger shall be connected to an outlet which has a Ground Fault Circuit Interrupter.

To open the enclosure a Torx 25 tool is needed.

Charging connector on the shower trolley

Charging connector on battery charger

Charging indicator

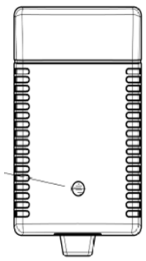

User Instructions

TR 3000-R – Charging instruction removable battery

Charge the battery daily for at least 8 hours or when the low battery audible tone sounds, when using the hand control. The batteries cannot be overcharged. The battery charger is equipped with a connector with a sealing and a locking function.

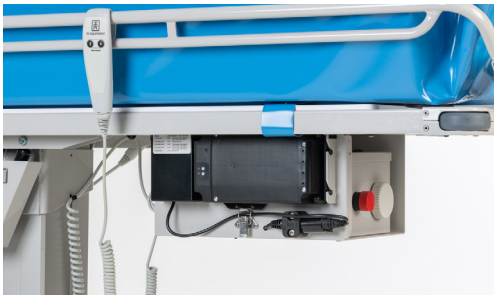

- Use only the battery charger supplied by TR Equipment.
- Connect the charger to the charging connector on the removable battery before connecting the charger to the mains supply.
- Charge the battery for at least 8 hours. The battery cannot be overcharged.
- Do not use battery charger i wet or damp areas – Potential shock hazard.
- The charger shall be connected to an outlet which has a Ground Fault Circuit Interrupter.
- To start or turn off the battery, push and hold the ON or OFF button for three seconds.

The charging indicator shows following:

- Flashing Green light = Battery is being charged

- Constant Green light = Battery is fully charged even if there is a constant Green light after a short period of time the batteries need to be charged for at least 8 hours.

- When the battery is fully charged (after at least 8 hours) remove the charger from the mains supply before you disconnect the charger from the removable battery.

How long does the battery hold the charge.		
Period (Including shipping)	**Capacity**	**Status**
3 months	79%	Usable
6 months	58%	Please charge before use
>6 months	<58%	Too long storage period, battery capacity harmed *Be sure to charge 24 hours every 6 months

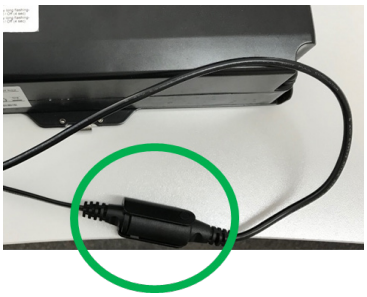

User Instructions

Side rails

The “bed side rail” (transfer side) is easily lowered to a horizontal position for a safe patient transfer and raised again before transport.

Pull the side rail to a vertical position (1), lift the side rail to release the two locks at the end of the side rail (2) and swing it down to a horizontal position (3).

The side rail on the nursing side pivots freely under the stretcher when performing the steps described above.

Raise the side rail by simply pulling it back into its upright position. Lower it and the two locks will automatically lock into place.

When transporting through narrow doorways, reduce the width of the shower trolley by holding the side rails in a vertical position.

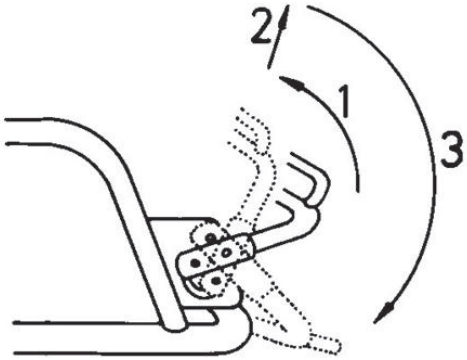

Bed side / Transfer side

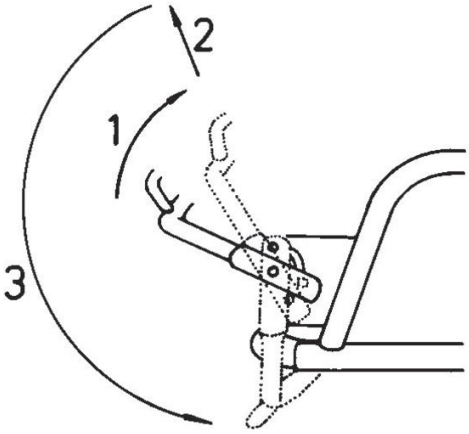

Nursing side

Bed side / Transfer side

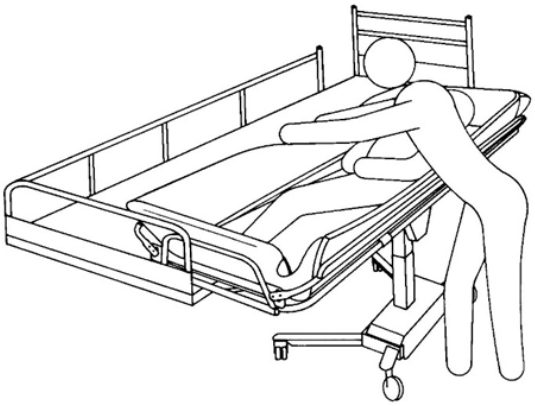

Nursing side

Corner bumber wheels

The TR 2000/3000 shower trolley is equipped with corner bumper wheels in all four stretcher corners to protect walls and doorways.

User Instructions

Castor with brake:

The TR 2000/3000 shower trolley is equipped with four castors with brake and they have a Red pedal.

- To activate the brake on the castor, press the Red pedal down with your foot until it clicks into position.
- To release the brake, press the upper side of the Red pedal upwards.

Castor with straight steering function (Option):

The TR 2000/3000 shower trolley can be equipped with two straight steering castors and they have a Black pedal.

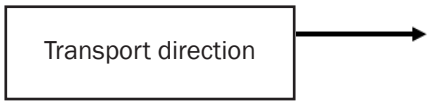

- Lock the straight steering castor facing the direction you are moving (transport direction).
- To activate the straight steering function, press the Black pedal DOWN until it clicks in position.
- To release the straight steering function, press the upper part of the Black pedal upwards.

User Instructions

Tilting the stretcher:

To drain the mattress after showering, tilt either end of the stretcher by pulling the release handle for end tilt (12), located under the end supports on the stretcher (see label on the short ends of the stretcher).

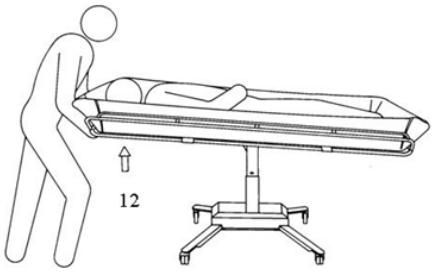

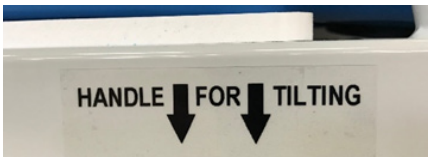

Label at the short ends of the stretcher.

Warning

- If the patient needs “Trendelenburg” position, only qualified staff who understand the procedures may operate the shower trolley.

Drainage:

The mattress has double drainages and plugs.
The flexible drain hose simply fits onto either of the two drain outlets on the mattress.

Pull out and bend the hose to prevent splashing when using the shower trolley over a floor drain.

To reduce water dripping on the floor, after use, bend the drain hose nozzle upwards using the plastic hose holder.

The drainage plug for each outlet is fastened with a nylon string on the stretcher frame.

Warning

- Never leave the patient unattended.
- Always check the water temperature by hand before showering the patient.
- Always use the hose holder to prevent dripping on the floor during transport.
- If the patient needs “Trendelenburg” position, only qualified staff who understand the procedures may operate the shower trolley.

User Instructions

Patient handling – From wheelchair onto shower trolley

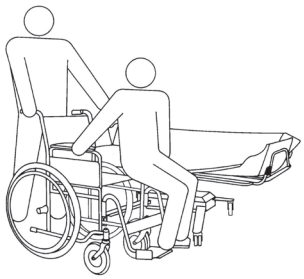

You can raise or lower the stretcher to match the height of the wheelchair and thus ease the transfer of wheelchair patients. Two attendants are recommended.

- Tilt the stretcher to a flat position with the release handle (12) and lower both side rails.

- Lower the shower trolley by using the DOWN pedal.
- Place the shower trolley in position and lock all castors with brake.
- Remove the wheelchair armrest and remove or swing the footrest clear on the transfer side.
- Centre the wheelchair close to the shower trolley “nursing side” and lock the wheelchair wheels.
- Transfer patient laterally between wheelchair and shower trolley, supporting the patient under arms
- Position patient comfortably on the stretcher, raise and lock both side rails. Remove the wheelchair. Raise the shower trolley, using the UP pedal.
- Unlock the castor brakes.
- Transport the patient to the hygiene area. To return patient to wheelchair from shower trolley simply reverse steps above in an opposite procedure.

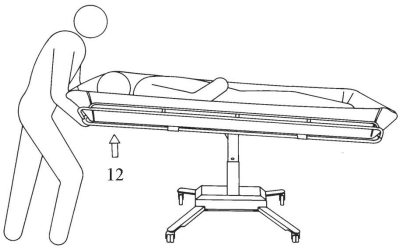

UP / +

DOWN / -

TR 2000

UP / +

DOWN / -

TR 3000

User Instructions

Patient handling – From bed onto shower trolley

Follow the recommended procedures. Do not omit any steps.
Stay in sequence.

- Make sure the bed guard rail is raised on the side of the bed opposite from the shower trolley.
- Turn the patient to his/her side, facing away from the shower trolley.
- Lower both side rails. The side rail on the transfer side stops horizontally.
- Move the shower trolley over the bed and lower the stretcher onto the bed mattress by using the DOWN pedal. Stop lowering when the stretcher is lowered down into the bed.
- Lock the castor brakes.
- Transfer the patient to a comfortable position onto the stretcher mattress.
- Lift and secure both side rails before the shower trolley is pulled away from the bed.

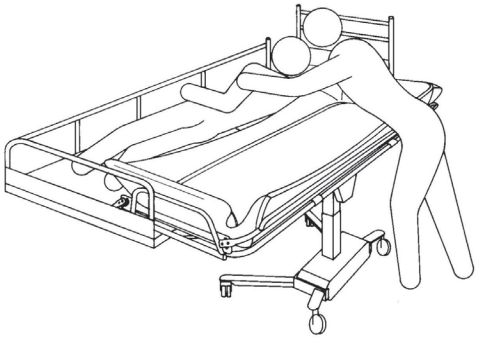

- Raise the stretcher, by using the UP pedal.

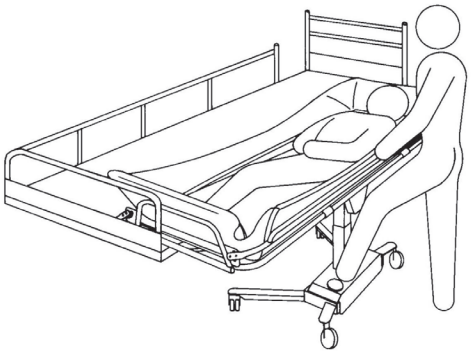

- Unlock the castor brakes and pull the shower trolley away from the bed.

- Use the tilt handle to tilt the stretcher into a comfortable position for the patient and adjust the trolley height to an ergonomically transporting height.

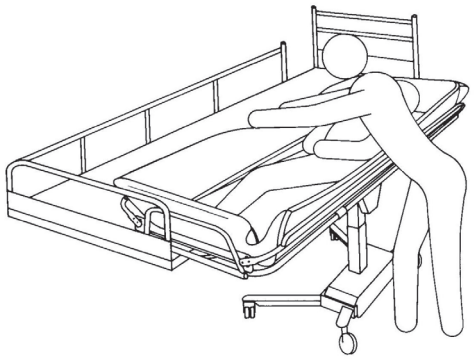

UP / +

DOWN / -

TR 2000

UP / +

DOWN / -

TR 3000

User Instructions

Patient handling – Showering the patient

When showering, the patient must remain on the shower trolley stretcher, with the side rails securely locked.

Always physically ensure that the water temperature is as desired before and during showering or bathing.

- Place the Shower Trolley foot end over a floor drain or sink and attach the drainage hose and drain plug (if desired).
- Position and activate the brake on the castors with brake.
- Tilt the stretcher for a comfortable position and to aid drainage by pulling the end tilt release handle under the head end on the stretcher.
- If patient prefers a raised position, option wedge pillow or movable backrest can be used.
  - The wedge pillow is placed on the mattress.
  - The movable backrest is placed under the mattress.

  It is recommended that at least two caregivers assist the patient in raising their upper body when positioning the wedge pillow or adjusting the movable backrest.
- Shower the patient. Body fluids and feces must immediately be removed to prevent mattress stains.
- After the patient is showered keep him/her warm wrapped in a bath towel.
- After showering, thoroughly drain the Trolley and replace drain plug and bend the drain hose nozzle upwards to prevent water dripping on the floor.
- Tilt the stretcher to a comfortable angle for the patient.
- Adjust the trolley height to an ergonomically transporting height.

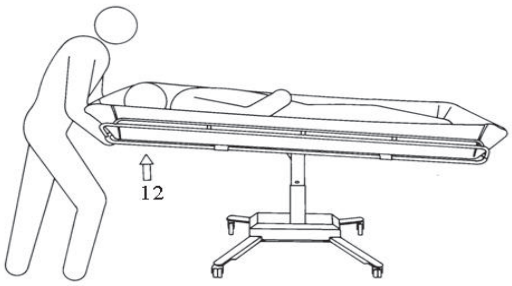

Backrest raised to 15°

Backrest raised to 30°

Warning

- Never leave the patient unattended.
- Always check the water temperature by hand or with a thermometer before showering the patient.
- If the patient need “Trendelenburg” position, only qualified staff who understands the procedures may operate the shower trolley.

Product label

UDI (Unique Device Identification) can be found within the barcode human readable text. It contains:

- (01) EAN code
- Date of Manufacture. The date is in the format YYYYMMDD Y = Year, M = Month and D = Date.
- Serial Number displayed as six digit code.

Table of Symbols

TR EQUIPMENT	TR Equipment Logotype		Visual inspection
MD	Medical equipment according to MDR 2017/745		Read the manual
CE	CE marking		Maximum patient weight 200kg
	Manufacturing date		WEEE Symbol May not be discarded in domestic waste
	Factory address	UK CA	UK
REF	Part number		Refer to Instruction manual (IFU)
SN	Serial number		Symbol on battery charger (TR 3000): Class II, double insulated
	Do not sit on the side parts of the stretcher	Internally powered medical equipment Only allowed to use charger 0541226 from TR Equipment	Internally powered medical equipment Use only battery charger supplied by TR Equipment Applied Part B
HANDLE FOR TILTING	Tilting handle for tilting the stretcher. Tilting handles placed at the short ends of the stretcher (under the plastic plate).	NURSING SIDE	Label shows which side is the nursing side.

Routine maintenance

The recommended frequency of these maintenance procedures will depend on how often the equipment is used. It's good practice to establish these procedures and then adjust the frequency as your conditions indicate.

Before every use
Visual inspect the TR 2000/3000 shower trolley:
- Make sure that it stands securely on the floor.
- Make sure that it is possible to raise and lower the shower trolley.
- Make sure that there are no damages on the stretcher, mattress and pillow that might hurt the patient.

Daily maintenance:
- Clean the shower trolley according to the cleaning instructions. See table of contents, "Cleaning instructions".

TR 3000
- Charge the batteries daily or whenever the shower trolley is not in use. The batteries cannot be overcharged. See table of contents, "Charging instructions".

Monthly maintenance:
- Make sure that all screw and fastenings are tightened properly.
- It's important that all screws and fastenings are checked and tightened if needed – including those not easily visible, for example under castors.
- Check the shower trolley for signs of damage or high level of wear.
- Inspect side rails to ensure they are in good condition, that all fasteners are in place and has proper function.
- Inspect the castors to ensure they are clean and that the brake function and straight steering function (option) is fully functioning.

TR 2000
- Check that the hydraulic pump is working smoothly throughout the entire lift range.

TR 3000
- Check that the raising and lowering function to ensure smooth operation throughout the entire lift range.
- Remove mattress and plastic plate. Inspect the stretcher signs of wear.

Warning
- Maintenance and/or repairs may only be carried out by the manufacturer or qualified staff authorised by the manufacturer, otherwise warranty expires immediately.

Important:
- Shower trolleys should immediately be taken out of operation if defects or irregularities are noted. Prompt service is required.

Routine maintenance

Annual maintenance:
Maintenance recommendations for Maintenance every 3 years, Maintenance every 5 years, and Maintenance every 10 years are based on Home Care use and Public use from SS-ISO 17966:2016.
If your TR 2000/3000 will be used in an institution, contact TR Equipment for a customized maintenance schedule
If you don't have the Service and maintenance manual, contact TR Equipment or your TR Equipment representative to get a new one. See contact info on www.trequipment.com.

TR 2000 / TR 3000
- Check that the gas springs are working properly. Use the tilt handle and tilt the stretcher. Make sure the stretcher is locked into position and doesn't move up and down.

Maintenance Every 3 years
- Repeat Before every use, Daily-, Monthly- and Annual maintenance.

Replace following parts TR 3000

• Replace batteries	Part.no: 819030
• Integrated batteries (2 units)	Part.no: 819030
• Removable battery	Part.no: 200110
• Replace both drainages	Part.no: 829392
• Replace drainage plugs	Part no: 829391
• Replace drainage hose	Part.no: 820818-4224 (1M) / 820818-4224-25 (2,5M)

Maintenance Every 5 years
- Repeat Before every use, Daily-, Monthly- and Annual maintenance.
- Inspect the quality of the mattress and pillow.

Replace following parts

• Replace castors:	
• Castors with brake	Part.no: 851760
• Straight steering castors (option)	Part.no: 851761
• Replace Gas springs	Part.no: 850268

Maintenance every 10 years
Repeat Before every use, Daily maintenance, Monthly maintenance, Annual maintenance, Maintenance every 3 years, and Maintenance every 5 years.

Warning
- Maintenance and/or repairs may only be carried out by the manufacturer or qualified staff authorised by the manufacturer, otherwise warranty expires immediately.

Important:
- Shower trolleys should immediately be taken out of operation if defects or irregularities are noted. Prompt service is required.

Cleaning instructions

General guidelines for cleaning detergent

- Nonabrasive type of detergent
- Less than 5 Wt% chloride content
- Less than 3 Wt% alcohol content

TR 2000/3000 shower trolley

The User/operator is responsible for selecting the detergents and additives. Please read the detergent supplier´s instruction manual and find out whether the product is suitable or not.

The shower trolley must be cleaned immediately after use. Dry the unit well before fastening the mattress.

Do not use solvent based cleaning liquids, which can damage or stain the mattress and pillow surface.

The shower trolley has a removable mattress and pillow made of PVC fabric. For a thorough cleaning of the shower trolley the mattress and pillow must be removed.

- Loosen the mattress straps (4pcs).
- Remove the plastic plate/plates.
- After cleaning the mattress and pillow thoroughly rinse them with the patient shower. Wipe and dry before using the shower trolley again.

Use a sponge or brush, and promptly remove any soap or lime deposits, and faeces to avoid spots/stains. **Always** rinse thoroughly with fresh water after using cleaning detergents.

Regular cleaning prolongs the lifetime of the product.

Mattress, re-attachment:

The mattress is attached to the stretcher with the fastening straps (4pcs).
Press the strap button onto the button on the inside of the stretcher frame.

Cleaning instructions

TR 2000/3000 shower trolley

- Select cleaning interval according to the degree of contamination.
- Contaminations should be removed as soon as possible in order to prevent material damage.
- Do not clean material with tools which might damage surfaces. Use a towel, sponge or a soft brush.
- Store mattress and pillow in a clean and dry condition only.
- Use natural, slightly alkaline detergent containing no solvents.
- Do not use products such as trichlorethylene that will damage the PVC surface on mattress and pillow.
- Do not use iodine based, disinfectants, this can discolor the PVC fabric on mattress and pillow.
- Do not use water hotter than 45°C / 113°F
- Avoid excessive friction and abrasive detergents when cleaning as this may damage the surfaces of the shower trolley.

Cleaning process for mattress, pillow and plastic plate:

- Lightly brush off loose dirt particles first, then rinse material with clear water.
- Spray on the cleaning product in indicated concentration or apply with a clean towel. Dose the amount according to degree of contamination.
- Allow the cleaning product to act for 2-5 minutes and wipe off with a towel.
- Rinse off dirt and cleaning product residues thoroughly with cold or lukewarm water to prevent material discolorations.Store mattress and pillow only if it’s clean and completely dry.

Disposal / Recycling

Recycling of the equipment

- Pillow and mattress are produced in lacquered PVC fabrics and filling materials are in Polyethen/Polyether.
- Pillow and shall be recycled as flammable materials.
- Plastic plate shall be recycled as flammable material.
- Metal parts shall be recycled in Metal recycling
- Castors are produced in Polyurethane and shall be recycled as flammable materials.
- Bolts shall be recycled as metal parts

TR 2000:

- Hydraulic pump shall be recycled as metallic waste.

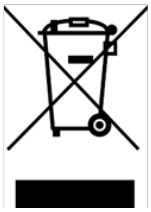

Important:

- When replacing batteries, deposit the batteries in accordance with national regulations.
- When replacing electrical and electronical parts/components, deposit the parts / components in accordance with national regulations.

Recycling of packaging materials.

- Wrapping materials is cardboard box and a wooden pallet.
- Cardboard box, cardboard bottom and cardboard lid shall be recycled as cardboard and pallet shall be recycled as wooden materials.

Warning

- Never use solvent based or strong alkaline cleaning liquids, which can damage or stain the mattress and pillow surfaces.
- Never clean the mattress and/or pillow in gas sterilization unit. Mattress and pillow will explode.
- Wipe the stretcher dry to prevent water dripping on the floor.
- Do not let the shower trolley dry in sunlight or close to a heater. This will cause discoloration. Avoid damage from overheating.

Important

- The user/operator is responsible selecting the correct cleaning liquid/detergent and additives according to local regulations and safety standards. Please read the cleaning liquid/detergent supplier´s instruction manual and find out whether the product is suitable for use with this product.

Maintenance record

Date	Description	Signed by

Training record

Date	Description	Signed by

Thank you for reading this document.

If you have questions regarding operation or maintenance of your equipment and cannot find the answer in this manual, please do not hesitate to contact us!

HEAD OFFICE TR EQUIPMENT AB, SWEDEN Phone: +46 140 77 00 40 E-mail: info@trequipment.se Website: www.trequipment.com
GROUP SUBSIDIARIES TR GROUP INC, USA Phone: +1 (800) 752 9600 TRANSPOREHAMED GMBH, GERMANY Phone: +49 (0) 212 6458500